# Operation & Maintenance Manual

Care and Maintenance of FRP storage tanks, pressure vessels and pipe.

STRAND™ COMPOSITES

228 W. Industrial Park Road, Harrison, Arkansas
Phone: 870-391-4792 Fax: 870-391-5215

Revision 1, 02/17/2022

# Contents

About this Manual ..... 2
Shipping and Handling ..... 2
Shipping ..... 2
Receiving Inspection ..... 3
Handling ..... 4
Rigging ..... 4
Temporary Storage ..... 5
Before Use ..... 5
Installation of FRP Tanks and Vessels ..... 6
Support Bases (Anchoring) ..... 6
Piping and Valves ..... 8
General Service Requirements ..... 9
Preventative Maintenance of FRP Tanks and Vessels ..... 10
Inspections ..... 10
Repairs ..... 10
External Inspections ..... 10
Internal Inspections ..... 10
Types of Damage ..... 11
Attachment A: Flange Bolt Tightening ..... 12

# About this Manual

Corrosion Resistant Fiber Reinforced Plastic (FRP or Fiberglass) tanks, vessels and pipe will last the full design lifecycle if properly maintained. Generally, if proper installed, FRP tanks, vessels and pipe simply perform their function for long periods to time and remain trouble-free. For this reason, FRP remains one of the most cost-effective storage solutions when corrosion is a concern.

The following information has been compiled to set forth the manufacturer's minimum requirements for trouble-free tank, vessel and pipe service life. This manual is a guide and should not be considered to be all inclusive nor is it meant to serve as an alternative to guidance from qualified personnel.

# Shipping and Handling

The flexural, impact and shear properties of FRP tanks, vessels and pipe are significantly lower than those of metallic structures; therefore, special consideration must be given to weight and weight distribution at contact points during handling, shipping and storage of FRP tanks, vessels and pipe. If any doubt exists regarding the handling procedures, the fabricator should be consulted.

## Shipping

Cylindrical tanks, vessels and pipe that are shipped in a horizontal position should be:

- mounted on padding and/or cradles as required. The supports should be placed as close as possible to the top and bottom heads of the vessel and/or other stiffened areas;
- secured to the truck or railcar with nylon straps that are properly fastened to the bed of the vehicle or car;
- blocked at the ends to prevent shifting in transit. The blocks should be padded and bear only on the knuckle radius of the flat or dished heads.

Large tanks, vessels or pipe being shipped in a vertical position should be padded then fastened to the bed of the vehicle with nylon straps for safe shipment.

Vessels should be secured on the vehicle with adequate clearance between the unit (including external fittings, or other projections) and the bed of the truck or railcar. Small units may be shipped on pallets or skids to permit forklift truck handling.

When two or more separate units are shipped together, sufficient clearance should be provided between units to prevent contact in transit.

Flange faces 48 inches and under should be protected by fully covering the flange and opening with suitable plywood or waterproof hardboard or hard plastic securely fastened. In sizes larger than 48 inches, only the flange faces need to be covered.

Pipe ends and fittings 8 inches or smaller should be protected by plastic, plywood, hardboard or water-resistant cardboard covering securely fastened.

All internal components should be adequately secured and/or padded to ensure safe shipment.

Accessories, small pipe pieces, fittings and miscellaneous small parts should be crated or boxed. Large pipe pieces are padded on load/truck. Additional protection within the crate or box may be required to assure that pieces are not damaged. Such protection may include cross bracing, end wrapping and/or batten padding. Boxes are to be identified as to contents and purchase order number or as otherwise required by the User.

Crates or boxes should be secured to the vehicle. All crates, boxes, skids and pallets should be made of quality lumber and selected fasteners (nails, bolts, lag screws, etc.) that will be sufficient to ensure safe handling.

## Receiving Inspection

When your tank or vessel arrives on the truck, inspect it carefully both inside and out for possible damage incurred during transit. This inspection should take place prior to unloading or handling. Should damage be observed, document the finding(s) on the Bill of Lading (BOL) and notify the fabricator's home office immediately. If the damage is not severe, it is acceptable to remove the tank or vessel from the truck; however, do not set the vessel or tank in the vertical position as the damaged areas would be much more difficult to repair in the erected position. Failure to follow these instructions may result in a damage claim not to be honored.

The inspection should include a complete check for:

- external surface damage such as cuts, penetrations and delaminated or fractured areas;
- fitting damage such as broken nozzles or flanges or gouged flange faces;
- internal surface damage such as crazing (white areas with star-shaped surface cracks);
- unit damage at contact points of dunnage, cradles, chocks or hold-down strap bands.

## Handling

When contracting a crane company, the riggers need to be informed of the vessel/tank weight and size. The crane riggers also need to consider other aspects governed by the site such as tank placement, space limitations and any other issues found necessary. Therefore, never select the capacity of the crane merely in accordance with the weight and size of the vessel since these are not the only considerations that need to take place to properly and safely erect the vessel.

## Rigging

Impact or excessive distortion can cause cracking or crazing of the laminate structure; therefore, special consideration must be given to the following:

- FRP tanks, vessels and pipe should never be rolled, slid, dropped or thrown;
- Where lifting lugs are not provided as part of the equipment, consideration should be given to the use of woven fabric rigger-slings properly sized for the load (with 3 inches being the minimum width) to lift horizontal units into position;
- Open ended equipment, such as open-top tanks, may require internal cross bracing or external structure to prevent damage from distortion during handling and transporting;
- For lifting an uncrated and un-skidded open-end tank or vessel in a vertical position, a spreader bar should be used to prevent damage from excessive distortion.

When rigging the vessel, be aware there will be two equally spaced lifting trunnions near the top of the cylindrical straight shell portion of the vessel. The dimensions of the lifting trunnion can be found on the latest revision of the “Approved for Fabrication” vessel drawing.

Both lifting trunnions must be used when going vertical using appropriately rated slings, straps, chokers or cables positioned between the trunnion and as close to the shell wall as possible to minimize load eccentricity. It is understood and accepted that both the lifting trunnions will be engaged when the tank is initially horizontal on the truck and these trunnions may or may not be on the same plane when the truck arrives.

A spreader bar should be sized to the diameter of the vessel ensuring that the trunnions are loaded perpendicularly to the trunnions’ centerline. NOTE: CABLES OR CHAINS SHOULD NOT BE PERMITTED TO IMPINGE THE FRP AT ANY POINT DURING THE LIFT. See Figure 1 to the right.

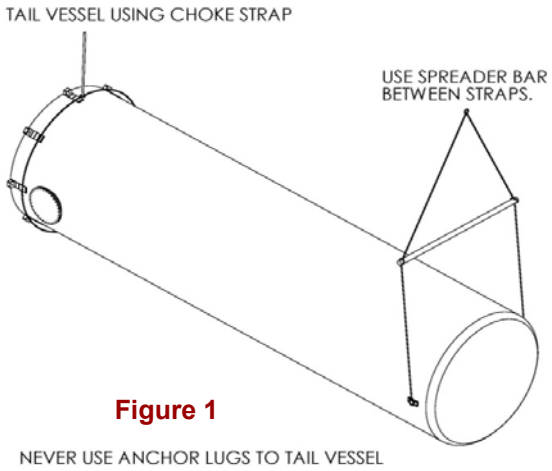


**Figure 1**

To tail the vessel, place an appropriately rated synthetic-type choke strap (such as Nylon) around the vessel's circumference as low as possible on the straight portion of the cylindrical shell. If the vessel has a side manway and/or insulation that tapers to an end near the bottom, place the choke strap below them if possible. This is considered the safest method to tail the vessel and prevent damage. NOTE: NEVER USE THE ANCHOR LUGS TO TAIL THE VESSEL!

To unload the vessel, attach the load slings to the trunnions and the choke strap around the vessel as described above then slowly lift the vessel off the truck while keeping it horizontal. After the vessel is elevated sufficiently to clear the truck, move it laterally several feet. The vessel is now ready to be carefully and slowly brought into a vertical position by reducing the load line and slacking the choke line. As the vessel becomes vertical, the tailing choke line will be ineffective. At this time, remove the choke line. The vessel is now ready to set on the foundation.

Most occurrences of damages to the vessel happens during the rigging operations and result from improper and careless handling or from failure to follow the guidelines provided herein. Strand Composites, LLC recommends that you and the rigging company familiarize yourselves with these guidelines and exercise extreme caution during handling. We are available to speak with you and your crane company if you have any questions or concerns. After the vessel has been erected, please inspect for any internal and external damage that may have occurred during this process.

## Temporary Storage

During storage or repositioning, FRP tanks and vessels should be left or placed on padding and/or cradles for dunnage resting only on firm, level surfaces. Units should not be permitted to rest on stones, tools, chocks or other small hard objects.

When stored outdoors, tanks and vessels should be adequately tied down to prevent movement due to wind or water flotation. Closed units should not be completely sealed. Additionally, if freezing conditions are possible, measures should be taken to prevent the accumulation of water inside.

Where a large open-ended tank is stored in a horizontal position, bracing is required at the open end to prevent excessive distortion. One cross brace with suitable padded end plates to distribute the load should be installed perpendicular to the surface on which the tank is resting.

## Before Use

It is the customer's responsibility to inspect the interior of the tank or vessel for contaminants such as Mylar film, excessive dust or manufacturing equipment or tools.

# Installation of FRP Tanks and Vessels

During storage or repositioning FRP tanks and vessels should be placed only on firm, level surfaces that are free of stones, tools and other small, hard objects since contact with such objects can cause localized damage.

## Support Bases (Anchoring)

The vessel support base surfaces should have a smooth trowel finish, be non-porous and free of cracks and depressions. The surface should be swept clean of any debris and should be flat.

Support base flatness is described in two ways: overall flatness and localized flatness. A support base should be flat to within ± 1/4” of a horizontal plane. Localized flatness is flatness within any ten (10) foot diameter circle and should be within ± 1/8”. Sloping bases must be equally flat.

Each flat-bottom unit should be set on a cushioned pad to minimize stress caused by seams, shrinkage distortion and/or support base or unit bottom irregularities. This pad should be a minimum of two (2) plies of 30# roofing felt or a petroleum-based mastic/sand mortar or other suitable conforming material that will cushion the bottom from surface irregularities of the support base with clearances so that contact will not occur between the support base and fittings or flanges.

Where a trench in a support base is required to accommodate bottom discharge piping, a structural trench cover should be installed flush with the top of the support base to minimize the unsupported area of the tank or vessel bottom.

All flat bottom vessels should be secured in place by bolting to the support base through hold-down lugs. This precaution will minimize the chance of damage at fitting locations and areas of other attachment due to movement of the vessel.

When anchoring a vertical vessel, the following should be performed once the vessel is positioned into place:

1) Fill the vessel to full or normal operating level with water or service fluid;
2) For type I, II and IIA anchor lugs, install high-strength grout and/or hard shim under lugs;
3) Apply one (1) nut to anchor bolt and hand tighten plus 1/4 turn;
4) Apply second nut to anchor bolt to “lock” both nuts in place.

(Diagrams of the various types of anchors on the following page.)

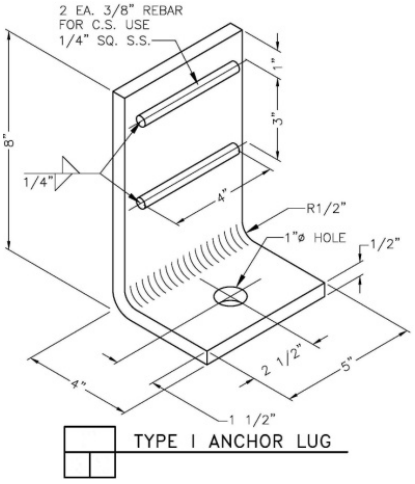


TYPE I ANCHOR LUG

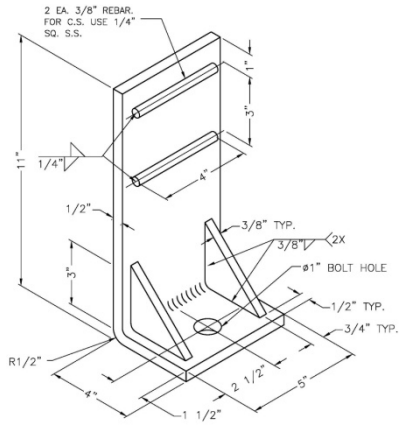


TYPE II ANCHOR LUGS

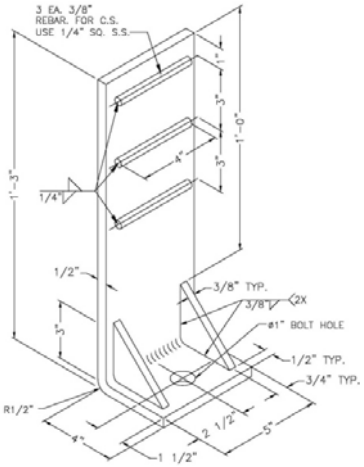


TYPE IIA ANCHOR LUG

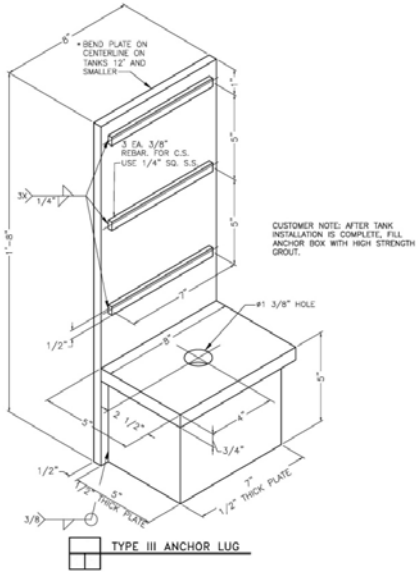


TYPE III ANCHOR LUG

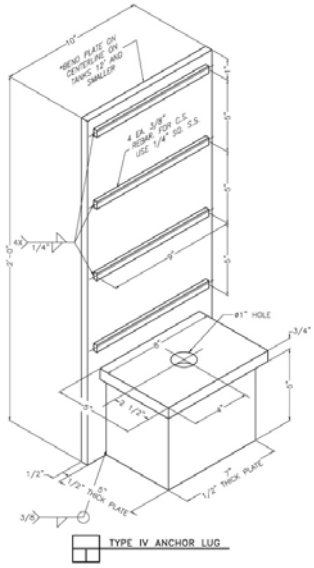


TYPE IV ANCHOR LUG

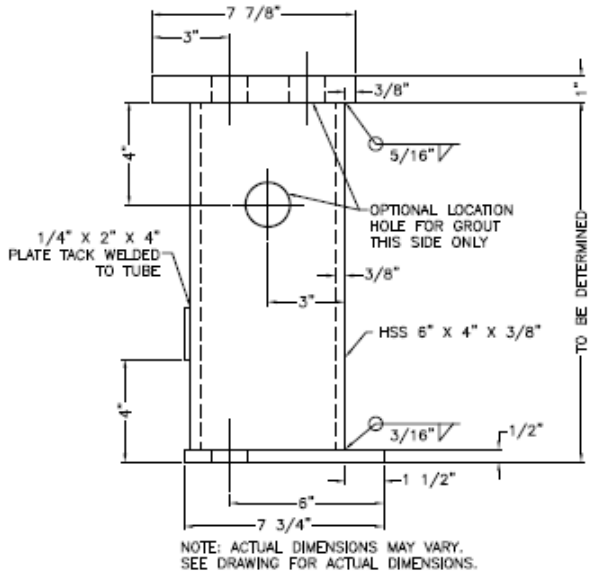


NOTE: ACTUAL DIMENSIONS MAY VARY.
SEE DRAWING FOR ACTUAL DIMENSIONS.

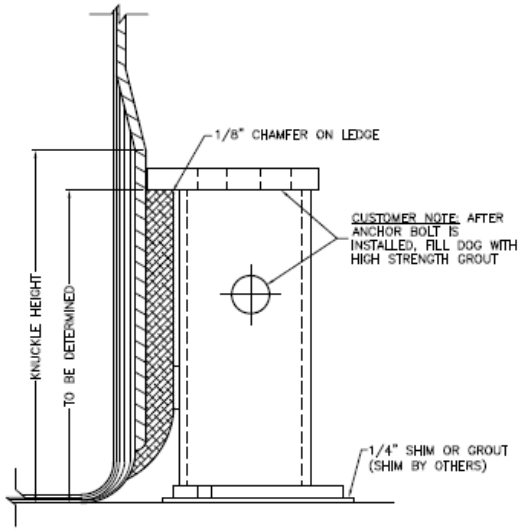

## Piping and Valves

All nozzles below the liquid level should be joined to piping through a flexible connection or flexible piping system.

Valves that are attached to tank or vessel nozzles should be independently supported so that the weight of the valve or the force of closing and opening of the valve does not transmit the total torque load directly to the nozzle.

Flanged connections should be made in accordance with the Fabricator's recommendations. Where the Fabricator's recommendations are not available and where a flanged pipe or fitting is attached to the unit nozzle with a full-face, the following apply:

- Full-face gaskets are to be used. If the mating flange has a raised face, it should be machined flat or a filler ring of the proper thickness should be applied to provide a full flat surface for contact. Gasket material with hardness exceeding 65 Durometer (Shore A) should not be used.

- Metal washers should be used under all bolt heads and nuts that would otherwise be in contact with the FRP flanges.

- Nut and bolt threads should be lubricated before tightening.

- Bolting take-up torque should be applied uniformly and in accordance with the sequence shown on Attachment "A".

- Where vertical or side entering agitation equipment is to be attached directly to a unit, design is required that is specific to that equipment and application.

- Side entering agitators should be independently supported.

- Where heating apparatus (electrical tape, coils or sparger) is to be installed, specific detailed design of this equipment and its installation or attachment arrangements should be approved by the unit designer.

# General Service Requirements

- Provision should be made to prevent tank or vessel contents from freezing. Positive venting arrangements should be provided to prevent internal or external over pressurization. A backup safety system, such as a conservation vent, is recommended.

- Provisions should be made to protect the unit from external damage such as due to vibration and impact.

- Piping of dissimilar material or other metal connections to the unit should be accompanied by an expansion joint capable of absorbing any adverse movement.

- Metal and FRP parts move at different rates under thermal load. Do not join one to the other without a compensating device.

# Preventative Maintenance of FRP Tanks and Vessels

## Inspections

All FRP tanks and vessels should be subjected to routine preventative maintenance inspections, both internally and externally, to ensure maximum service life. Annual inspections are recommended unless more frequent inspections are specified. Units holding compounds known to degrade laminates rapidly such as Sodium Hypochlorite or other unstable compounds should be inspected more frequently than those containing nonaggressive substances.

## Repairs

Inspection should be combined with a documented engineering evaluation of the findings. On the basis of evaluation, current conditions and estimated rate of change, the owner may decide to delay repair or replacement of the vessel. The manufacturer strongly recommends immediate repair when such is an option. Continued use of a compromised tank or vessel is not recommended. In the event that repair becomes necessary, it is generally best to solicit the repair from the manufacturer.

## External Inspections

External inspections can be conducted at any time. These inspections entail walking around the unit, looking for physical damage and any signs of leakage from the unit wall, connections or from beneath the unit. Unprotected fiberglass laminate will, over time, degrade due to exposure to sunlight; therefore, it is important that the condition of a tank or vessel's exterior coating be monitored and renewed as necessary to prevent excessive fiber bloom.

## Internal Inspections

The objective of internal inspection is primarily to assess the condition of the corrosion barrier and the rate of its deterioration as a result of exposure to the units corrosive contents; however, structural damaged hidden from view by the unit's exterior coating can often be detected during internal inspection as well.

It is highly recommended that inspections be conducted by qualified individuals who are familiar with the appearance of laminates in various stages of chemical attack or damage.

## Types of Damage

Many types of damage may be found in FRP equipment and the causes of this damage are likewise numerous. The most common types, and things Inspectors look for during internal inspections include:

- Aging damage
- Surface attack
- Barrier film formation
- Stripping
- Mud-cracking
- Erosion / Corrosion
- Permeation
- Osmotic blistering
- Debonding
- Stress corrosion
- Mechanical damage
- Structural cracking
- Surface crazing
- Deformation
- Heat-related damage
- Loss of strength, stiffness and hardness
- Thermal or shrinkage cracking

# Attachment A: Flange Bolt Tightening

## Modified Fig. NM9-3 Flange Bolt Tightening

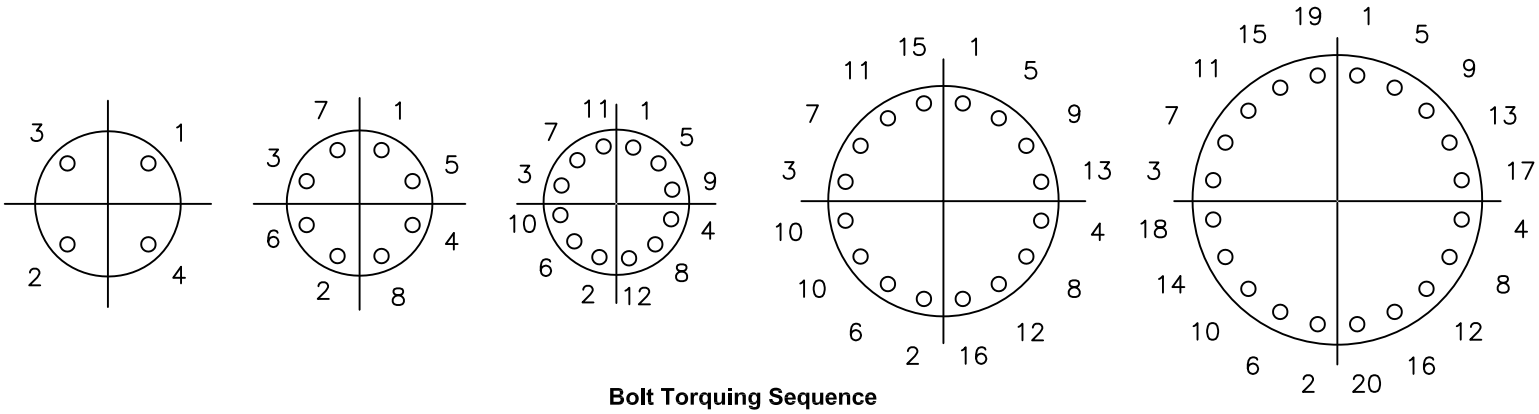


**Bolt Torquing Sequence**

Recommended Bolt Torques for Hand Lay–up Flanges

| Pipe Size | Bolt Dia. | Torque ft–lb |
|---|---|---|
| 1 1/2 | 1/2 | 20 |
| 2 | 5/8 | 25 |
| 3 | 5/8 | 25 |
| 4 | 5/8 | 25 |
| 6 | 3/4 | 25 |
| 8 | 3/4 | 25 |
| 10 | 7/8 | 25 |
| 12 | 7/8 | 25 |
| 14 | 1 | 30 |
| 16 | 1 | 30 |
| 18 | 1 1/8 | 35 |
| 20 | 1 1/8 | 35 |
| 24 | 1 1/4 | 40 |
| Manways | 3/8 | 15 |
| Manways | 1/2 | 20 |
| Manways | 5/8 | 25 |
| Manways | 3/4 | 30 |

GENERAL NOTES:
a) With Felpro C5A thread lubricant or equal.
b) For machine–made pipe flanges, see manufacturer's instructions.
c) Flanges should only be mated with flat faced flanges with full faced gaskets having a durometer (shore A) of 65 or less. Use of ring gaskets, raised faced flanges, etc are prohibited.